Sheet Metal Micrometers

SERIES 389, 189, 119, 118

FEATURES

- Measures thickness of sheet metal, and rubber parts.
- With Ratchet Stop for constant force.
- With a standard except for 25mm model.
- IP65 water/dust protection (389 series*).
  *Except for **389-513**
- With digit counter (series 189).

DIMENSION

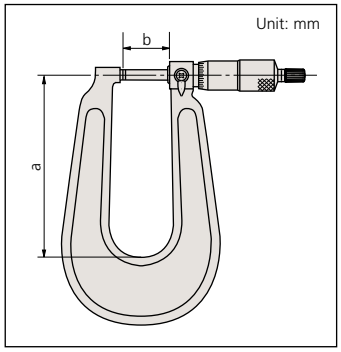

SPECIFICATIONS

Metric Digital model

Range	Order No.	Accuracy	a/b
0 - 25mm	**389-251**	±4μm	160/27.5mm
	389-261S-F	±4μm	160/27.5mm
	389-271S-S	±4μm	160/27.5mm
	389-513	±5μm	330/35mm
25 - 50mm	**389-252**	±4μm	165/27.5mm
	389-262S-F	±4μm	165/27.5mm
	389-272S-S	±4μm	165/27.5mm

S-F: Spherical anvil and flat spindle
S-S: Spherical anvil and spherical spindle

Inch/Metric Digital model

Range	Order No.	Accuracy	a/b
0 - 1"	**389-351**	±.0002"	160/27.5mm
	389-361S-F	±.0002"	160/27.5mm
	389-371S-S	±.0002"	160/27.5mm
	389-713	±.00025"	330/35mm
1" - 2"	**389-352**	±.0002"	165/27.5mm
	389-362S-F	±.0002"	165/27.5mm
	389-372S-S	±.0002"	165/27.5mm

S-F: Spherical anvil and flat spindle
S-S: Spherical anvil and spherical spindle

Metric Mechanical counter model

Range	Order No.	Accuracy	a/b
0 - 25mm	**189-102**	±4μm	160/27.5mm

Inch Mechanical counter model

Range	Order No.	Accuracy	a/b
0 - 1"	**189-129***	±.0002"	160/27.5mm

*.0001" reading is obtained with vernier.

Metric

Range	Order No.	Accuracy	a/b
0 - 25mm	**118-101**	±4μm	110/27.5mm
	118-102	±4μm	160/27.5mm
	118-114S-F	±4μm	160/27.5mm
	118-118S-S	±4μm	160/27.5mm
	118-103	±5μm	330/35mm
25 - 50mm	**118-110**	±4μm	165/27.5mm

S-F: Spherical anvil and flat spindle
S-S: Spherical anvil and spherical spindle

Inch

Range	Order No.	Accuracy	a/b
0 - 1"	**118-129***	±.0002"	160/27.5mm
	118-116S-F*	±.0002"	160/27.5mm
	118-120S-S*	±.0002"	160/27.5mm
	118-107	±.00025"	330/35mm
1" - 2"	**118-112**	±.0002"	165/27.5mm

S-F: Spherical anvil and flat spindle
S-S: Spherical anvil and spherical spindle
*.0001" reading is obtained with vernier.

Metric Dial reading model

Range	Order No.	Accuracy	Throat
0 - 25mm	**119-202**S-F	±4μm	50mm

S-F: Spherical anvil and flat spindle

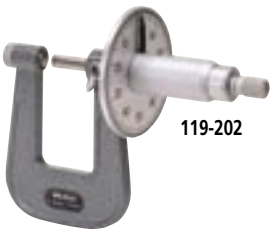

DIMENSION

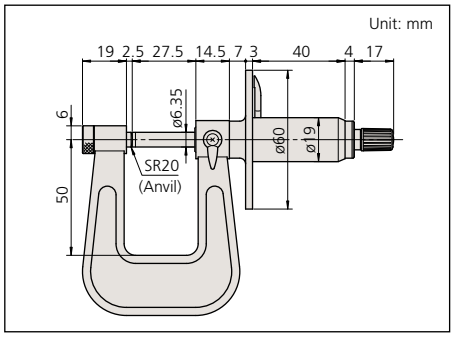

SPC

TÜV Rheinland ID:4011207400

IP65

(Refer to the page 9 for details.)

Anvil-Spindle Combinations

Standard, Flat-Flat

Spherical-Flat (S-F)

Spherical-Spherical (S-S)

Technical Data

Accuracy: Refer to the list of specifications. (excluding quantizing error for digital models)
Resolution*: 0.001mm or .00005"/0.001mm
Graduation**: 0.01mm, .001" or .0001"
Flatness: 0.6μm for models with 150mm throat
1μm for models with 300mm throat
Parallelism: 3μm
Measuring faces: Carbide tipped
Display*: LCD
Battery*: SR44 [1 pc. (2 pcs.: **389-513** and **389-713**)], **938882**
Battery life*: Approx. 1.2 years under normal use (1.8 years: **389-513** and **389-713**)
Dust/Water protection level*: IP65
*Digital models **Analog models

Function of Digital Model

Origin-set (Preset*), Zero-setting, Data hold, Power ON/OFF*, Data output, inch/mm conversion (inch/mm models)
Preset zero-setting Power ON/OFF Data hold Data output inch/mm conversion (inch/mm models) *Only for **389-513, 389-713**
Alarm: Low voltage, Counting value composition error

Optional Accessory for Digital Model

05CZA662: SPC cable with data switch (1m)
05CZA663: SPC cable with data switch (2m)
937387: SPC cable for **389-513/389-713** (1m)
965013: SPC cable for **389-513/389-713** (2m)

The 119 series is provided with a dial for making easy and quick reading.